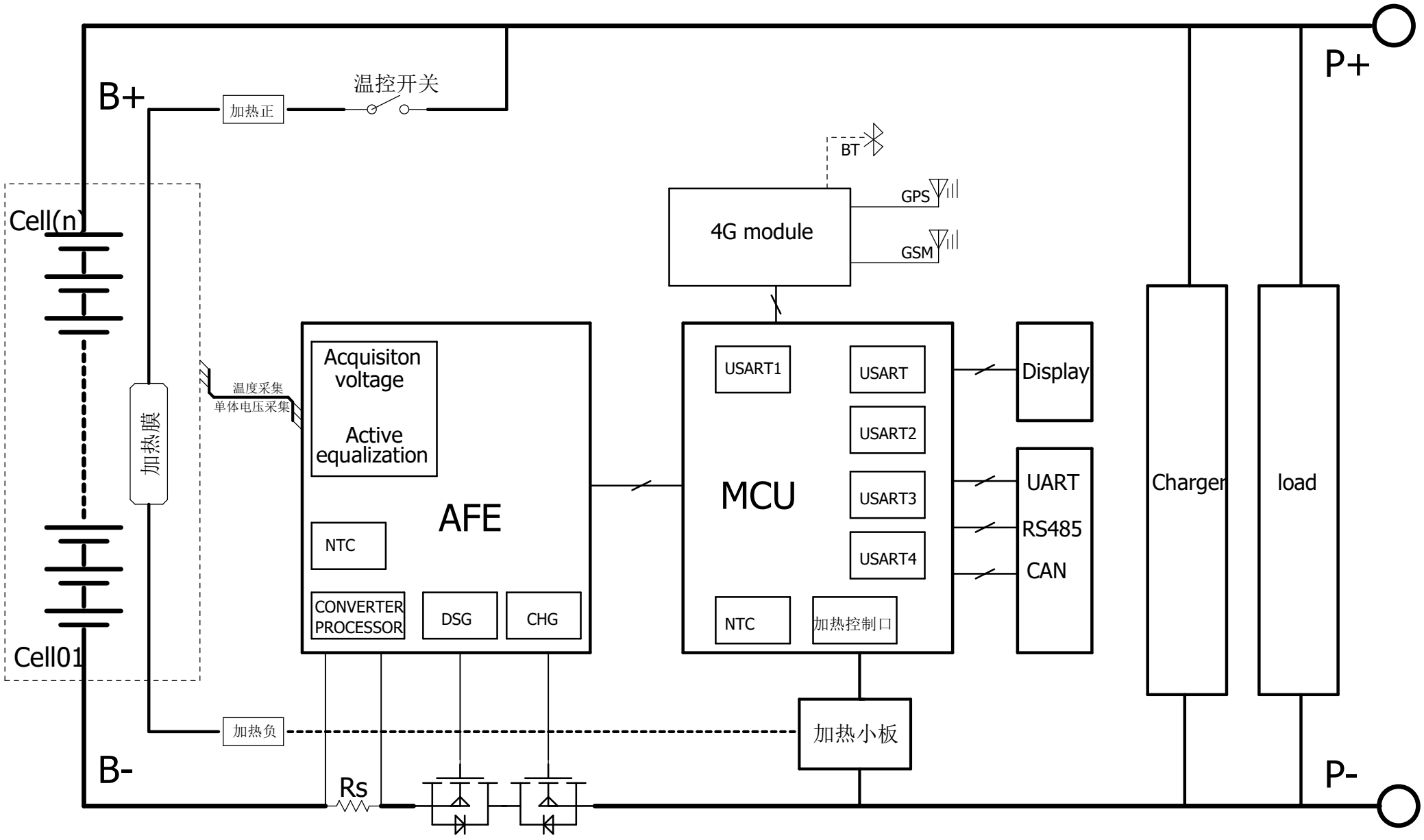

MING TANG	
MODEL: BM571	TITLE: 电池保护板
编制: 余涛	DATE: 2024-02-25
审核:	Sheet 1 OF 1 Rev 1.0