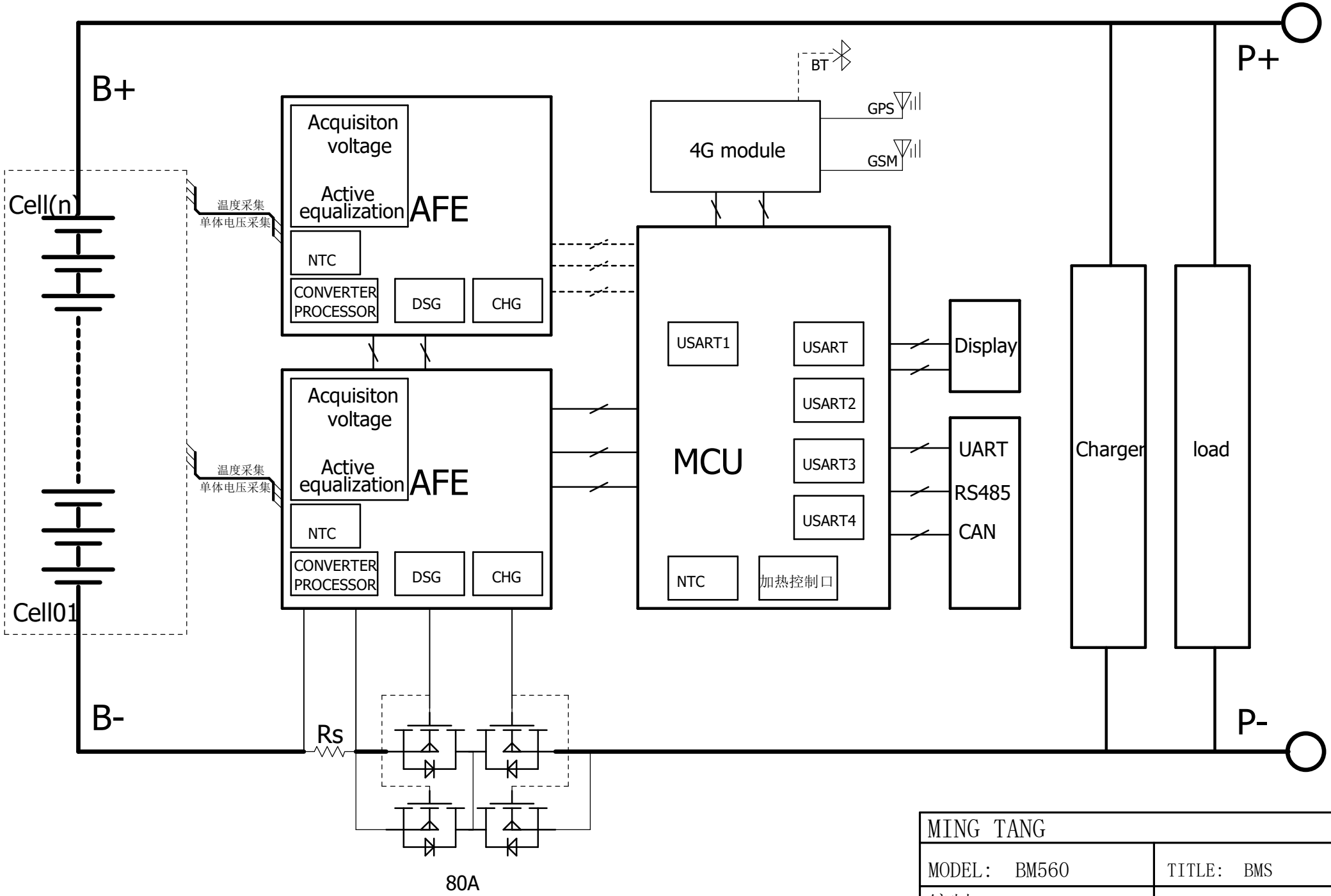

MING TANG	
MODEL: BM560	TITLE: BMS
编制:	DATE: 2023-04-25
审核:	Sheet 1 OF 1 Rev 1.0